Service Adjustment Procedure

Clutch Pedal Inspection And Adjustment

1. Measure the clutch pedal height (from the face of the pedal pad to the floorboard) and the clutch pedal clevis pin play (measured at the face of the pedal pad.)

Standard value
(A) : 6 ~ 13mm (0.24~0.51in)
(B) : 196.9mm (7.75in)

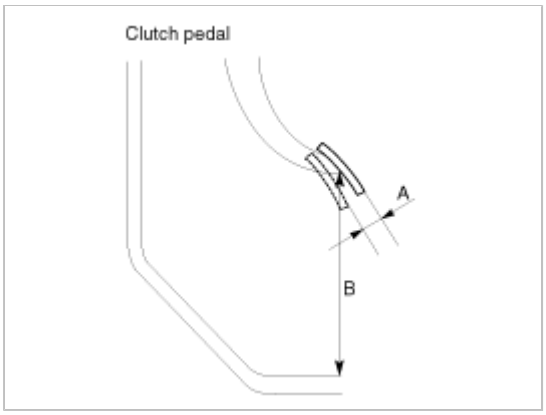

Removal

1. Remove the transmission assembly. (Refer to Manual transmission removal in MT group)
2. Insert the special tool (09411-43000) in the clutch disc to prevent the disc from shifting.

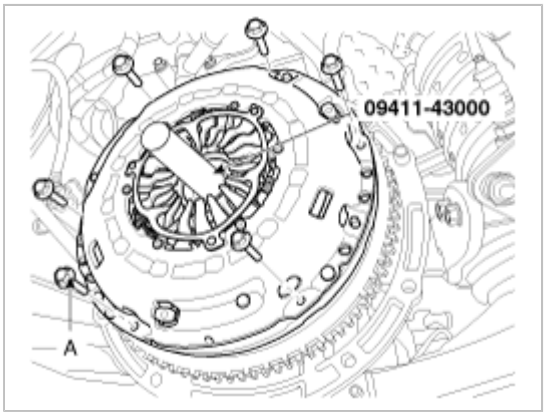

3. Loosen the bolts(6ea) which attach the clutch cover to the flywheel in a star pattern.
   Loosen the bolts in succession, one or two turns at a time, to avoid bending the cover.

> **NOTE**
>
> Do not clean the clutch disc or the release bearing with cleaning solvent.

Inspection

Clutch Disc Cover Assembly

1. Check the diaphragm spring end for wear and uneven height.
2. Check the pressure plate surface for wear, cracks and color change.
3. Check the rivets for looseness and replace the clutch cover assembly if necessary.

Clutch Disc

1. Check the clutch facing for loose rivets, uneven contact, deterioration due to seizure, adhesion of oil, or grease, and replace the clutch disc if defective.
2. Measure the thickness of the disc when free.

Standard value
Clutch disc thickness (A) [when free] :
8.4 ± 0.3mm [0.33 ±0.012in]
Limit :
Clutch disc rivet depth (B) : 0.3mm [0.012in]

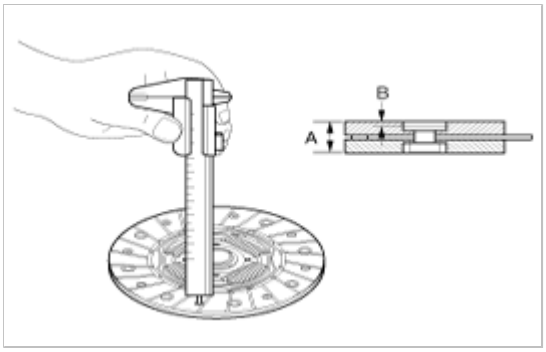

3. Check for the torsion spring play and damage and if defective, replace the clutch disc.
4. Clean the splines on the input shaft and install the clutch disc.
   If the disc does not slide smoothly or if play is excessive, replace the clutch disc and/or the input shaft.

Clutch Release Bearing

> CAUTION
>
> The release bearing is packed with grease. Do not use cleaning solvent or oil.

Standard grease : CASMOLY L9508

1. Check the bearing for seizure, damage or abnormal noise. Also check the diaphragm spring contacting points for wear.
2. Replace the bearing if the release fork contacting points are worn abnormally.

Clutch Release Fork

If there is abnormal wear at the point of contact with the bearing, replace the release fork assembly.

Installation

1. Apply multipurpose grease to the spline of the disc.

   Grease : CASMOLY L 9508

   > CAUTION
   >
   > When installing the clutch, apply grease to each part, but be careful not to apply excessive grease.
   > It can cause clutch slippage and vibration (judder).

   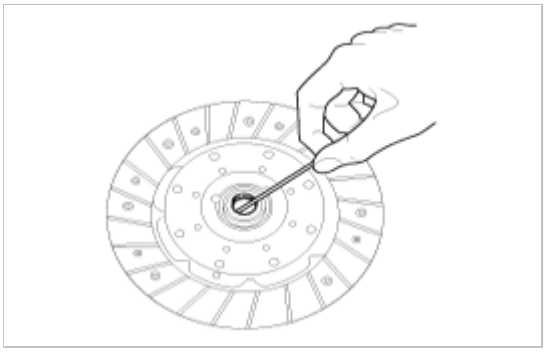

2. Install the clutch disc assembly to the flywheel using the special tool (09411-43000).

   > CAUTION
   >
   > Be sure to place the face of the disc prihted 'T/M SIDE' toward the transmission.

3. Install the clutch cover assembly to the flywheel and temporarily tighten the bolts one or two steps at a time in a star pattern.

   Tightening torque :
   Clutch disc cover bolt :
   25~36Nm (2.5~3.6kgf.m, 18.1~26.0lb-ft)

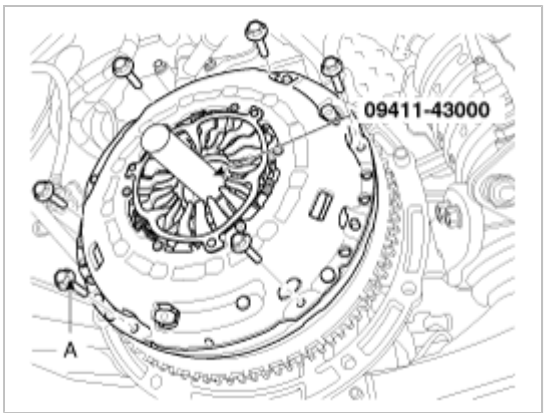

4. Remove the clutch disc guide (09411-43000).
5. Install the transmission assembly to the engine. (Refer to Manual transmission installation in MT group)

Components

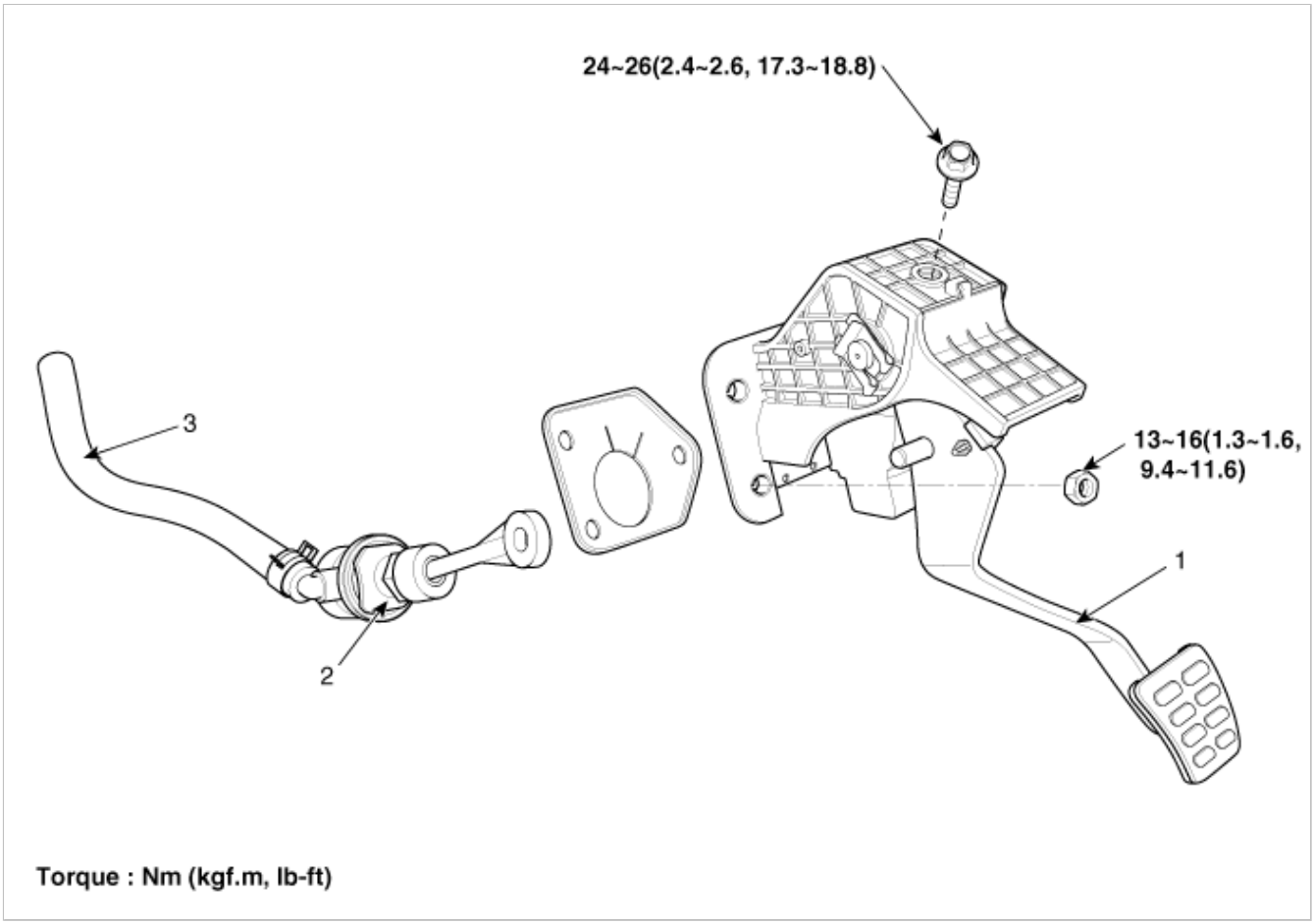

1. Clutch pedal assembly 2. Clutch master cylinder assembly	3. Clutch fluid hose

Removal

1. Remove the flexible hose (A) from the brake reserve tank.

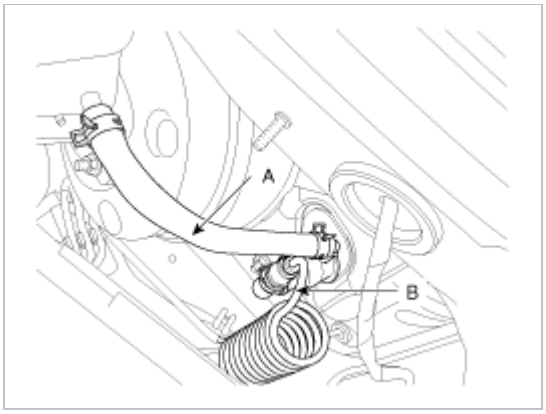

2. After pulling out a clip, disconnect the clutch tube (B) from the master cylinder.
3. Disconnect the ignition lock switch connector (A).

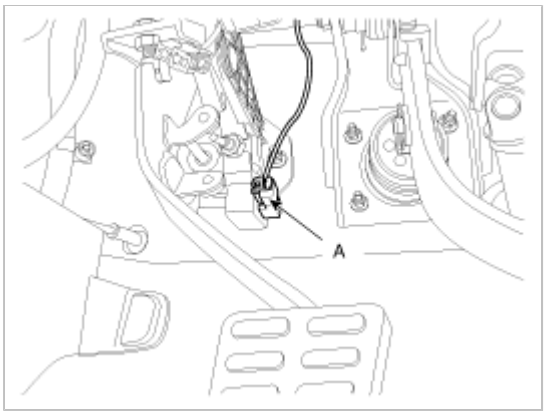

4. Remove the push rod from the clutch pedal by removing the snap pin (A) and washer (B).

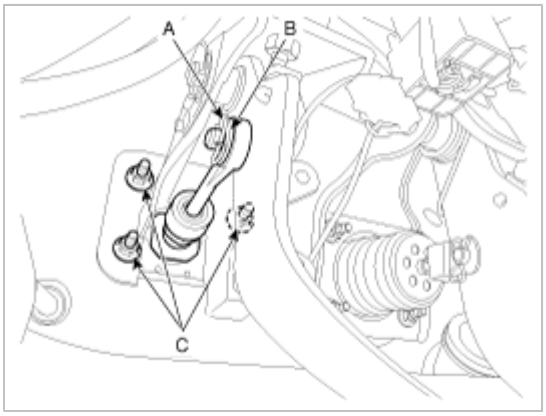

5. Remove the clutch pedal mounting nut (C-3ea).
6. Remove the clutch pedal bracket mounting nut (A-2ea).

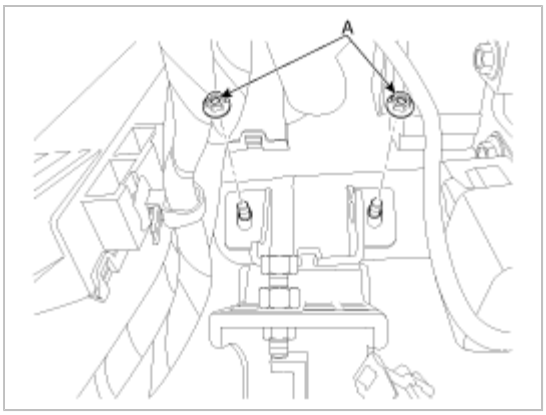

7. Remove the clutch master cylinder from the clutch pedal assembly by rotating the clutch master cylinder 45 degree counter clockwise.

Inspection

1. Check the inside of the cylinder body for rust, pitting or scoring.
2. Check the piston cup for wear or distortion.
3. Check the piston for rust, pitting or scoring.
4. Check to make sure the clutch line tube is not clogged or restricted in any way.
5. Measure the master cylinder inside diameter and the piston outside diameter with a cylinder gauge micrometer.

> NOTE
>
> Measure the inside diameter of the master cylinder at three places (bottom, middle, and top) in a perpendicular direction.

6. If the master cylinder-to-piston clearance exceeds the limit, replace the master cylinder and/or piston assembly.

Limit : 0.15 mm (0.006 in)

Installation

1. Install the clutch master cylinder to the clutch pedal assembly by rotating the clutch master cylinder 45 degree clockwise.
2. Install the clutch pedal bracket mounting nut (A-2ea).

Tightening torque :
13~16 Nm (1.3 ~ 1.6 kgf.m, 9.4~11.6 lb-ft)

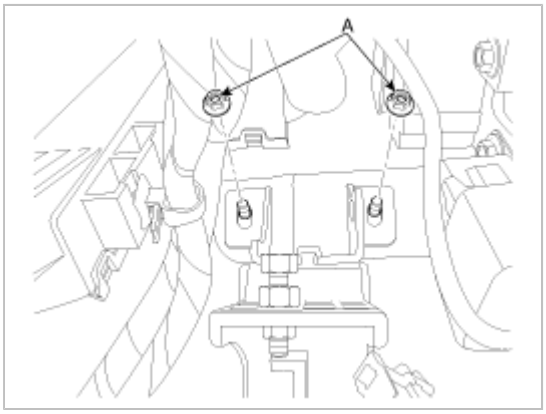

3. Install the clutch pedal mounting nut (C-3ea).

Tightening torque :
13~16 Nm (1.3 ~ 1.6 kgf.m, 9.4~11.6 lb-ft)

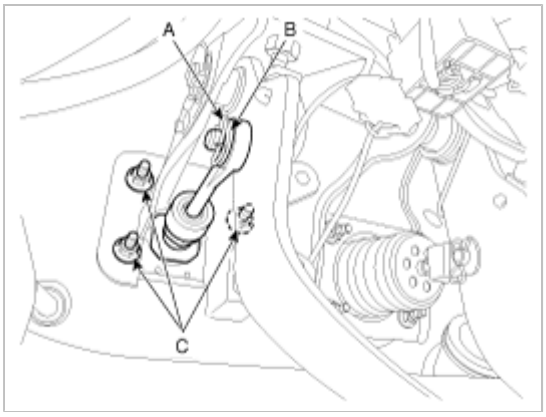

4. Install the push rod to the clutch pedal by installing the snap pin (A) and washer (B).

Wheel bearing grease : SAE J310, NLGI No.2

5. Connect the ignition lock switch connector (A).

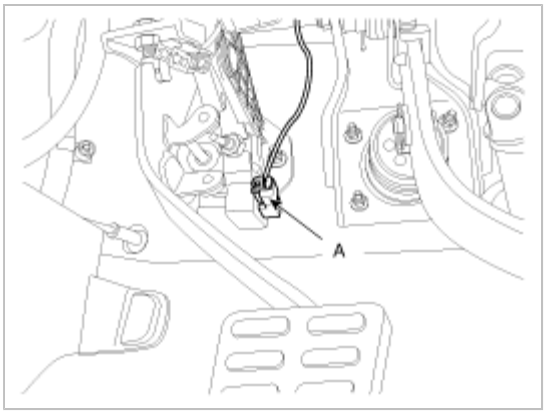

6. Install the flexible hose (A) to the brake reserve tank.

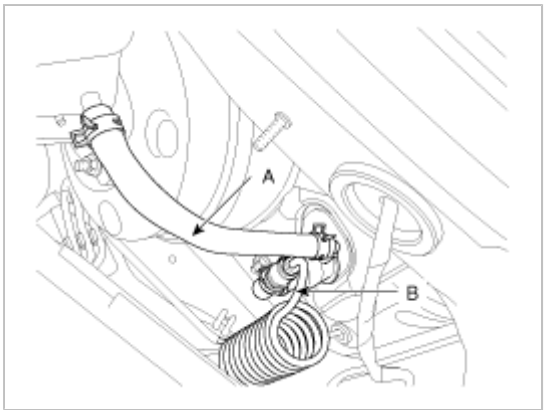

7. Connect the clutch tube (B) to the master cylinder and insert a clip.
8. Refill the brake fluid.
9. Bleed the air in the clutch system. (Refer to bleeding in service adjustment procedure)

Components

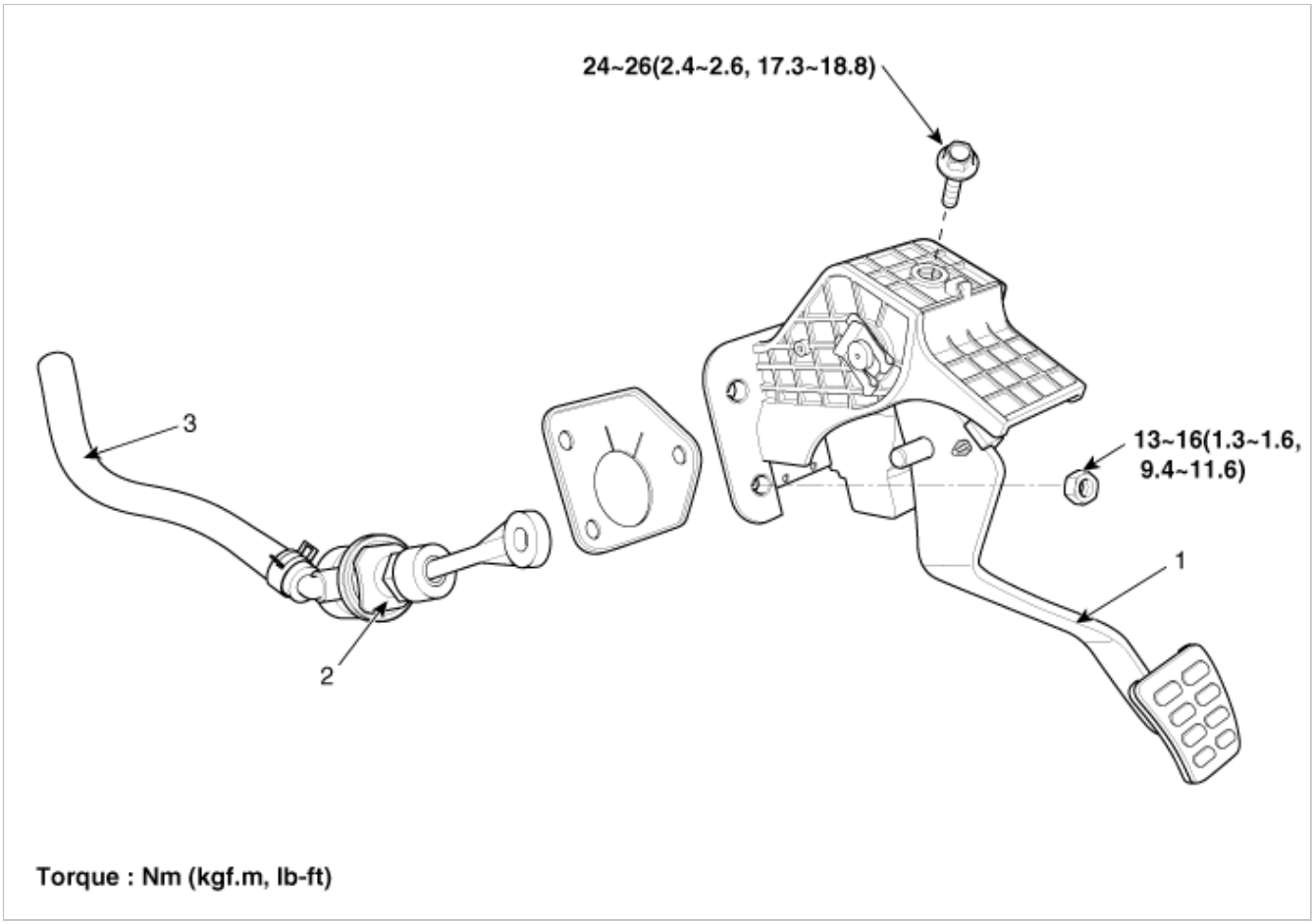

1. Clutch pedal assembly 2. Clutch master cylinder assembly	3. Clutch fluid hose

Removal

1. Remove the flexible hose (A) from the brake reserve tank.

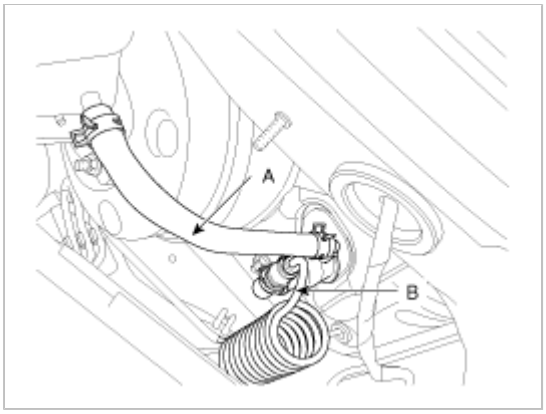

2. After pulling out a clip, disconnect the clutch tube (B) from the master cylinder.
3. Disconnect the ignition lock switch connector (A).

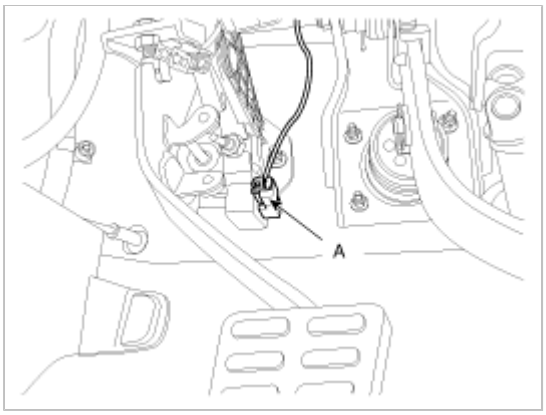

4. Remove the push rod from the clutch pedal by removing the snap pin (A) and washer (B).

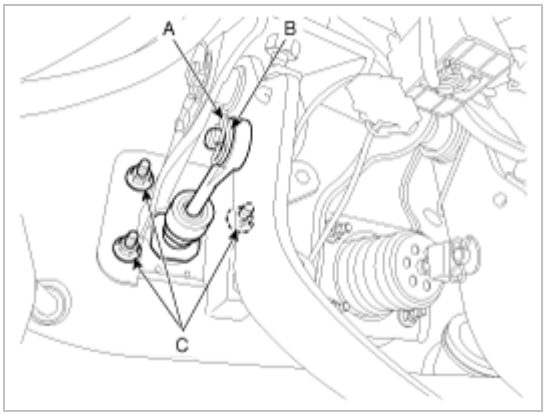

5. Remove the clutch pedal mounting nut (C-3ea).
6. Remove the clutch pedal bracket mounting nut (A-2ea).

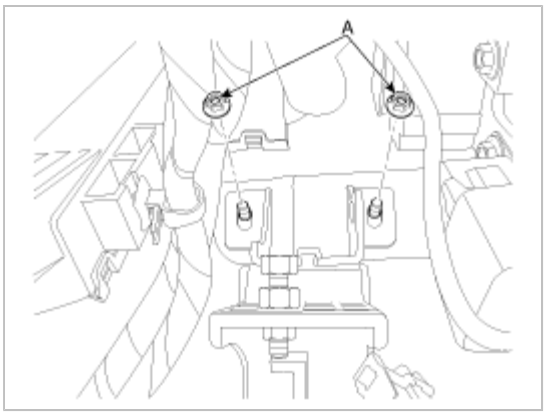

7. Remove the clutch master cylinder from the clutch pedal assembly by rotating the clutch master cylinder 45 degree counter clockwise.

Inspection

Clutch Pedal Assembly

1. Check the pedal shaft and bushing for wear.
2. Check the clutch pedal for bending or torsion.
3. Check the return spring for damage or deterioration.
4. Check the pedal pad for damage or wear.

Ignition lock switch inspection

Remove the ignition lock switch and check for continuity between the terminals. If the continuity is not as specified, replace the switch.

Terminal / Condition	1	2
Pushed(ON)	○	○
Free(OFF)		

Standard value
Full stroke(A) : 12.0 ± 0.3mm (0.472 ± 0.012 in.)
ON-OFF point (B) : 2.0 ± 0.3mm (0.078 ± 0.012 in)

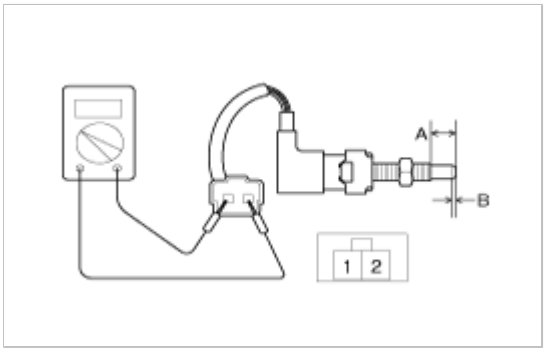

Installation

1. Install the clutch master cylinder to the clutch pedal assembly by rotating the clutch master cylinder 45 degree clockwise.
2. Install the clutch pedal bracket mounting nut (A-2ea).

Tightening torque :

13~16 Nm (1.3 ~ 1.6 kgf.m, 9.4~11.6 lb-ft)

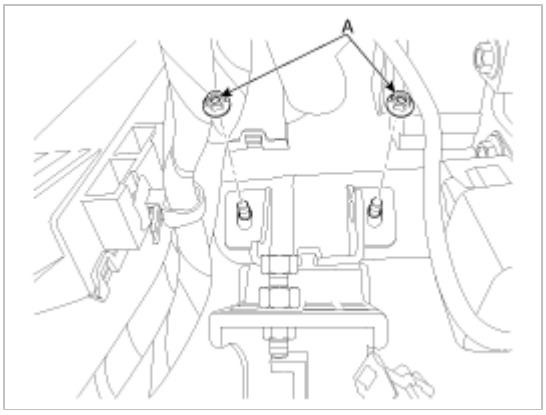

3. Install the clutch pedal mounting nut (C-3ea).

Tightening torque :
13~16 Nm (1.3 ~ 1.6 kgf.m, 9.4~11.6 lb-ft)

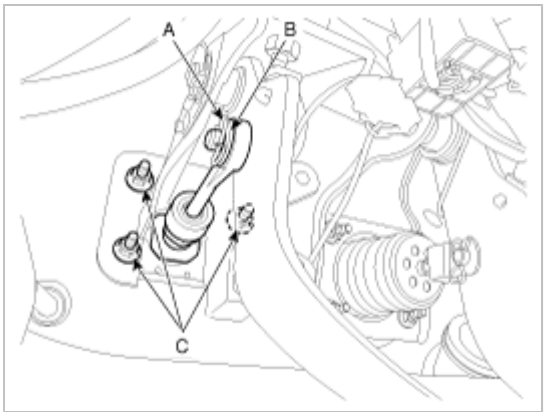

4. Install the push rod to the clutch pedal by installing the snap pin (A) and washer (B).

Wheel bearing grease : SAE J310, NLGI No.2

5. Connect the ignition lock switch connector (A).

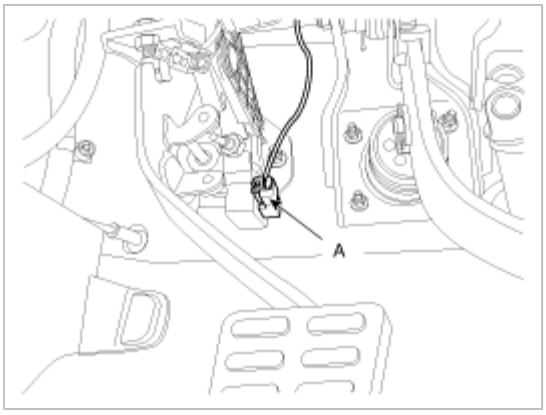

6. Install the flexible hose (A) to the brake reserve tank.

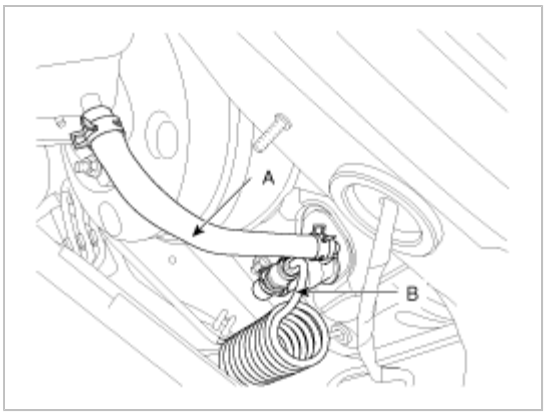

7. Connect the clutch tube (B) to the master cylinder and insert a clip.
8. Refill the brake fluid.
9. Bleed the air in the clutch system. (Refer to bleeding in service adjustment procedure)

Components

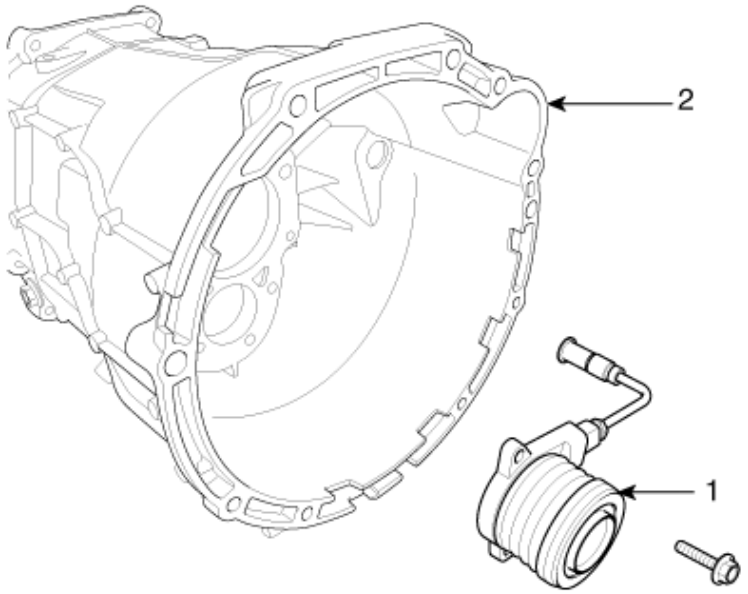

1. C.S.C (Concentric Slave Cylinder) assembly	2. Manual transmission case

Removal

1. Remove the transmission assembly. (refer to Manual transmission removal in MT group)
2. Remove the C.S.C assembly (B) from the transmission case by removing bolts (A-3ea).

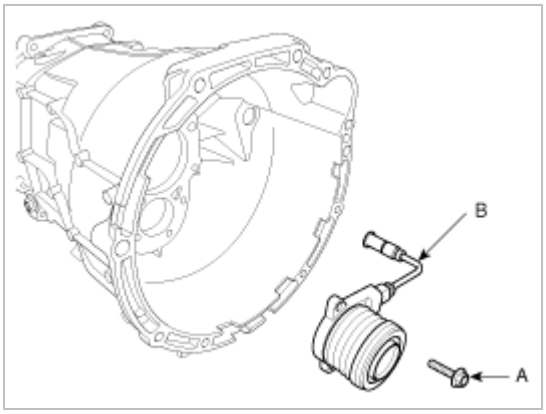

Installation

1. Install the C.S.C assembly (B) to the transmission case by installing bolts (A-3ea).

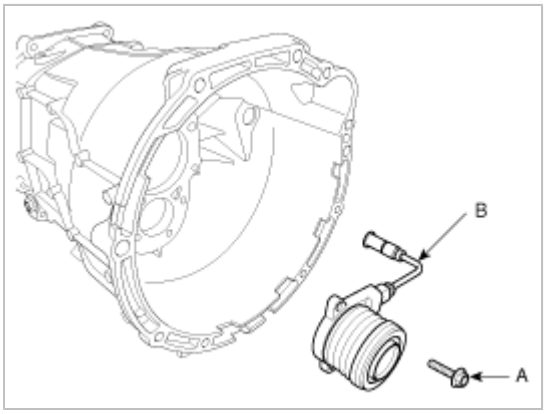

2. Install the transmission assembly. (refer to Manual transmission installation in MT group)
3. Bleed the air in the C.S.C system. (refer to C.S.C Adjustment Procedure)

C.S.C Adjustment Procedure

C.S.C(Concentric Slave Cylinder) Air Bleeding

1. After disconnecting a cap from the concentric slave cylinder air bleeder, insert a vinyl hose in the plug.
2. Loosening the plug screw, press and release the clutch pedal about 10 times.

> CAUTION
>
> Hold the air bleeder body not to rotate with a spanner.
> The holding is needed when the plug loosened or tightened.

3. Tighten the plug during the clutch pedal pressed.
   Afterwards, raise the pedal with a hand.

Tightening torque :
8~10 Nm (0.8~1.0 kgf.m, 2.8~7.2 lb-ft)

4. After pressing the clutch pedal 3 times more, loosen the plug and retighten it with the pedal pressed. Raise it

again, then.
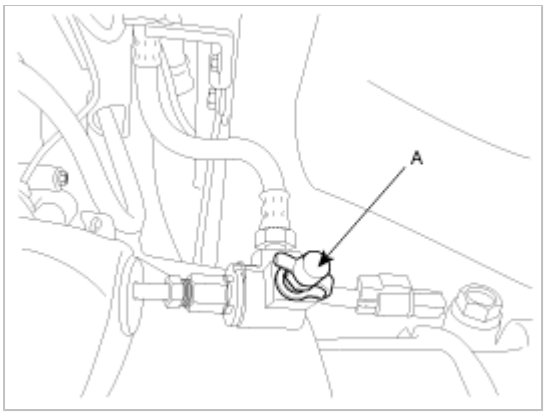
5. Repeat the step 4 two or three times. (until there is no bubble in the fluid)